aerospace
climate control
electromechanical
filtration
fluid & gas handling
hydraulics
pneumatics
process control
sealing & shielding

J&J Air Systems

Pneumatic cylinders

Series P1S - Ø10 to Ø125 mm
According to ISO 6432 - 6431

Catalogue PDE2535TCUK

Parker

ENGINEERING YOUR SUCCESS.

Contents

Page

Stainless steel cylinders, general information....3
Cylinder forces....5
P1S-S, ISO 6432, Ø10-Ø25....6
Main data....6
Cushioning diagram....7
Material specification....7
Dimensions....8
Stroke length....9
Order key....9
Guide to selecting tubing....10-11
Mountings....12-14
P1S- ISO 6431, Ø32-Ø125....15
Main data....15
Cylinder forces....15
Cushioning diagram....15
Stroke length....16
Order key....16
Dimensions Ø32-Ø63....17
Material specification Ø32-Ø63....17
Dimensions Ø80-Ø125....18
Material specification Ø80-Ø125....18
Mountings....19-22
Sensors....23-26
Seal kits for P1S cylinders....27
Grease....27

Important
Before attempting any external or internal work on the cylinder or any connected components, make sure the cylinder is vented and disconnect the air supply in order to ensure isolation of the air supply.

Note
All technical data in this catalogue are typical data only.
Air quality is essential for maximum cylinder service life (see ISO 8573).

WARNING

FAILURE OR IMPROPER SELECTION OR IMPROPER USE OF THE PRODUCTS AND/OR SYSTEMS DESCRIBED HEREIN OR RELATED ITEMS CAN CAUSE DEATH, PERSONAL INJURY AND PROPERTY DAMAGE.
This document and other information from Parker Hannifin Corporation, its subsidiaries and authorized distributors provide product and/or system options for further investigation by users having technical expertise. It is important that you analyze all aspects of your application and review the information concerning the product or system in the current product catalog. Due to the variety of operating conditions and applications for these products or systems, the user, through its own analysis and testing, is solely responsible for making the final selection of the products and systems and assuring that all performance, safety and warning requirements of the application are met. The products described herein, including without limitation, product features, specifications, designs, availability and pricing, are subject to change by Parker Hannifin Corporation and its subsidiaries at any time without notice.

SALE CONDITIONS
The items described in this document are available for sale by Parker Hannifin Corporation, its subsidiaries or its authorized distributors. Any sale contract entered into by Parker will be governed by the provisions stated in Parker's standard terms and conditions of sale (copy available upon request).

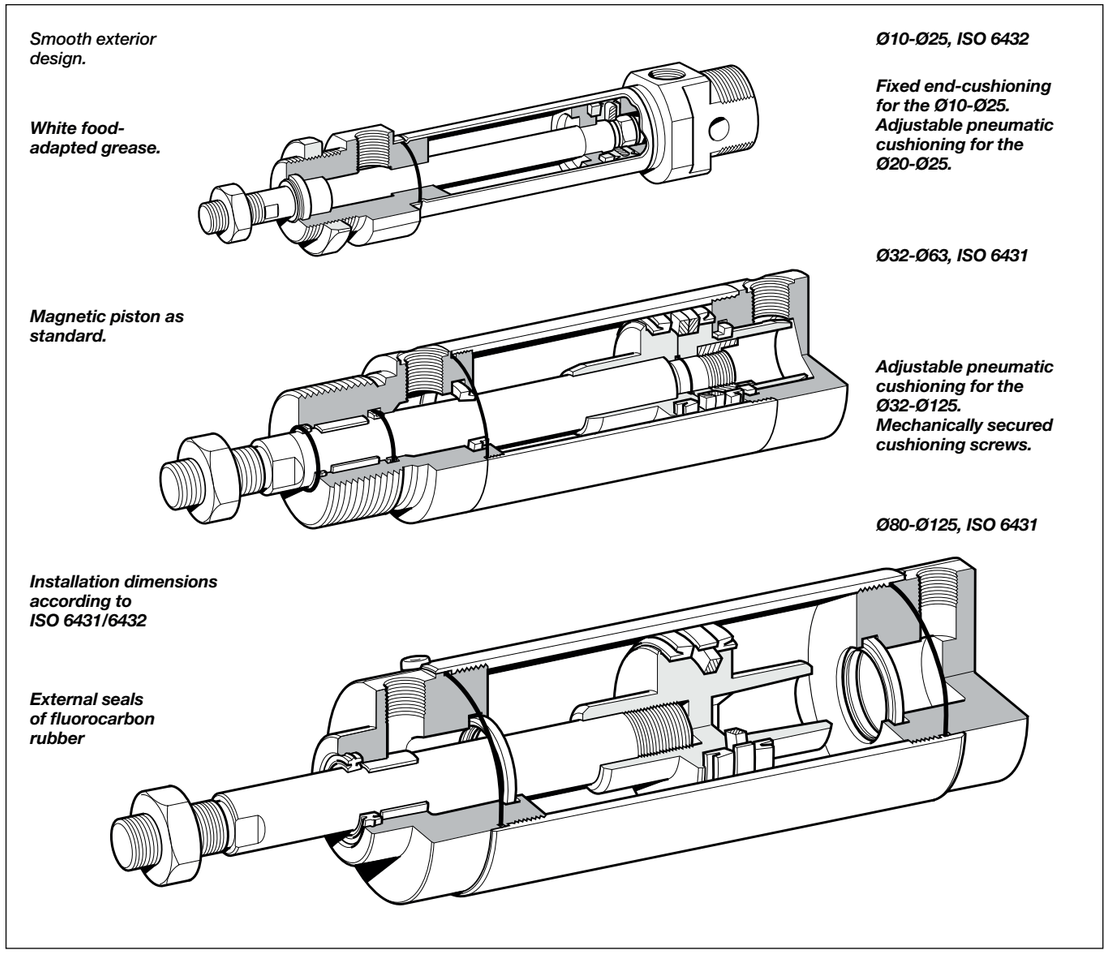

Stainless steel cylinders

Parker Pneumatic's range of stainless steel cylinders has been specially designed for use in difficult environments. Smooth design, external seals of fluorianted rubber and prelubrication with our food-industry-approved grease according to USDA-H1 make the cylinders particularly suitable for food industry use. All cylinders have magnetic pistons for proximity position sensing. Fixing dimensions to ISO 6431/6432 simplify installation and make the cylinders physically interchangeable throughout the world.

ISO 6432

The cylinders are available in two versions. One with fixed end-cushioning and is available in 10, 12, 16, 20 and 25 mm diameters. A single-acting version with spring return in the negative direction, is available in the same diameters.

One version has adjustable pneumatic end-cushioning and is available in 20 and 25 mm diameters.

ISO 6431

The ISO cylinders are double-acting round cylinders with several types of cylinder mountings as standard. The cylinders are available in 32 to 125 mm diameters, incorporating adjustable end-cushioning. As with the ISO 6432 it is designed to comply with hygiene requirements in accordance with the EU Machine Directive.

The cylinder can be dismantled to facilitate service and maintenance.

Stainless steel construction
The cylinders are made for use in particularly demanding environments. The piston rod, cylinder tube and end covers are all of stainless steel.

Effective end-cushioning
A version of ISO 6432 Ø10-Ø25 incorporates fixed end-cushioning, while the cylinders Ø20-Ø125 have pneumatic end-cushioning with adjusting screws for exact setting, permitting heavier loads and higher speeds for short cycle times.

Smooth external design
The end covers have no recesses or other grooves that could collect dirt or liquid. Cleaning is easy and effective.

Dry operation
Particular attention has been paid to the design of the cylinders' scraper rings, piston rod bearings and piston rod seals. Self-lubricating materials permit regular washing/degreasing of the piston rod. This is important in applications where hygiene and cleaning must be of high standard.

Proximity position sensing
All cylinders in normal temperature design are fitted with a magnet for proximity position sensing. Electronic type sensors and reed switches are available. They are supplied with either flying lead or cable plug connector.

Complete range of mountings
A complete range of stainless steel mounting accessories with ISO dimensions is available.

Variants
In addition to the basic design, several standard variants of these stainless steel cylinders are available to fulfill more demanding requirements in terms of performance and environmental conditions:

- Cylinders with special stroke lengths
- Cylinders with extended piston rods
- Single-acting cylinders (Ø10-Ø25)
- High-temperature versions for operation in temperature range:
  - Ø10 to Ø16 mm from -10 °C to +120 °C (not magnetic piston)
  - Ø20 to Ø125 mm from -10 °C to +150 °C (not magnetic piston)

Double acting Ø10-Ø25, fixed end-cushioning

Double acting Ø20-Ø25, adjustable end-cushioning

Double acting Ø10-Ø25, through piston rod

Single acting Ø10-Ø25

Double acting Ø32-Ø63

Double acting Ø80-Ø125

Cylinder forces, double acting variants

Cyl. bore/ pist. rod mm	Stroke	Piston area cm²	Max theoretical force in N (bar) 1.0	2.0	3.0	4.0	5.0	6.0	7.0	8.0	9.0	10.0
10/4	+	0.8	8	16	24	31	39	**47**	55	63	71	79
	-	0.7	7	13	20	26	33	**40**	46	53	59	66
12/6	+	1.1	11	23	34	45	57	**68**	79	90	102	113
	-	0.8	8	17	25	34	42	**51**	59	68	76	85
16/6	+	2.0	20	40	60	80	100	**120**	141	161	181	201
	-	1.7	17	35	52	69	86	**104**	121	138	156	173
20/8	+	3.1	31	63	94	126	157	**188**	220	251	283	314
	-	2.6	26	53	79	106	132	**158**	185	211	238	264
25/10	+	4.9	49	98	147	196	245	**295**	344	393	442	491
	-	4.1	41	82	124	165	206	**247**	289	330	371	412

+ = Outward stroke
- = Return stroke

Note!
Select a theoretical force 50-100% larger than the force required

Cylinder forces single acting variants

Indicated cylinder forces are theoretical and should be reduced according to the working conditions.

Order code	Theoretical piston force at 6 bar		Spring retraction	
	Nmax	Nmin	Nmax	Nmin
Single acting. spring return				
P1S-S010SS-0010	38	36	10	8.5
P1S-S010SS-0015	38	36	10	7.8
P1S-S010SS-0025	39	36	10	6.6
P1S-S010SS-0040	38	34	13	9
P1S-S010SS-0050	39	34	13	8
P1S-S010SS-0080	39	34	12	7
P1S-S12SS-0010	53	51	16	14.4
P1S-S12SS-0015	53	51	16	13.6
P1S-S12SS-0025	55	51	16	12
P1S-S12SS-0040	52	48	19	13.4
P1S-S12SS-0050	53	48	19	12
P1S-S12SS-0080	55	48	21.4	12
P1S-S16SS-0010	102	99	22.3	20.2
P1S-S16SS-0015	103	99	22.3	19
P1S-S16SS-0025	105	99	22.3	17
P1S-S16SS-0040	106	95	22.3	14
P1S-S16SS-0050	108	95	22.3	12
P1S-S16SS-0080	107	95	22.5	12
P1S-S20SS-0010	163	161	30	28
P1S-S20SS-0015	164	161	30	27
P1S-S20SS-0025	167	161	30	25
P1S-S20SS-0040	166	159	30	22
P1S-S20SS-0050	168	159	30	20
P1S-S20SS-0080	170	161	29.4	18
P1S-S25SS-0010	256	253	44.3	41.4
P1S-S25SS-0015	258	253	44.3	40
P1S-S25SS-0025	262	253	44.3	37
P1S-S25SS-0040	261	250	44.3	32
P1S-S25SS-0050	264	250	44.3	30
P1S-S25SS-0080	264	251	44.4	30

Order code	Theoretical piston force at 6 bar		Spring extension	
	Nmax	Nmin	Nmax	Nmin
Single acting. spring-extend				
P1S-S16TS-0010	85	84	22.3	20.2
P1S-S16TS-0015	86	84	22.3	19
P1S-S16TS-0025	88	84	22.3	17
P1S-S16TS-0040	90	84	22.3	14
P1S-S16TS-0050	91	84	22.3	12
P1S-S20TS-0010	132	130	30	28
P1S-S20TS-0015	133	130	30	27
P1S-S20TS-0025	135	130	30	25
P1S-S20TS-0040	138	130	30	22
P1S-S20TS-0050	140	130	30	20
P1S-S20TS-0080	139	108	31	17
P1S-S25TS-0010	205	203	38.5	36
P1S-S25TS-0015	207	203	38.5	34.7
P1S-S25TS-0025	210	203	38.5	32
P1S-S25TS-0040	214	203	38.5	28.5
P1S-S25TS-0050	217	203	38.5	26
P1S-S25TS-0080	223	206	36	21

Main data

Cylinder designation	Cylinder bore	area	Piston rod bore	area	thread	Total mass at 0 mm stroke	addition per 10 mm stroke	Air consumption	Conn. thread
	mm	cm²	mm	cm²		kg	kg	litres	
Double acting. cushioned stroke									
P1S-S10D	10	0.78	4	0.13	M4	0.04	0.003	0.0100 1)	M5
P1S-S12D	12	1.13	6	0.28	M6	0.07	0.004	0.0139 1)	M5
P1S-S16D	16	2.01	6	0.28	M6	0.09	0.005	0.0262 1)	M5
P1S-S20D	20	3.14	8	0.50	M8	0.18	0.007	0.0405 1)	G1/8
P1S-S25D	25	4.91	10	0.78	M10x1.25	0.25	0.011	0.0633 1)	G1/8
Double acting. adjustable cushioning									
P1S-S20M	20	3.14	8	0.50	M8	0.18	0.007	0.0405 1)	G1/8
P1S-S25M	25	4.91	10	0.78	M10x1.25	0.25	0.011	0.0633 1)	G1/8
Single acting. spring return									
P1S-S10SS	10	0.78	4	0.13	M4	0.04	0.003	0.0055 1)	M5
P1S-S12SS	12	1.13	6	0.28	M6	0.08	0.004	0.0079 1)	M5
P1S-S16SS	16	2.01	6	0.28	M6	0.10	0.005	0.0141 1)	M5
P1S-S20SS	20	3.14	8	0.50	M8	0.18	0.007	0.0220 1)	G1/8
P1S-S25SS	25	4.91	10	0.78	M10x1.25	0.26	0.011	0.0344 1)	G1/8
Single acting. spring-extended									
P1S-S16TS	16	2.01	6	0.28	M6	0.10	0.005	0.0141 1)	M5
P1S-S20TS	20	3.14	8	0.50	M8	0.18	0.007	0.0220 1)	G1/8
P1S-S25TS	25	4.91	10	0.78	M10x1.25	0.26	0.011	0.0344 1)	G1/8

1) Free air consumption per 10 mm stroke length for a double stroke at 6 bar

Working medium, air quality

Working medium: Dry, filtered compressed air to ISO 8573-1 class 3.4.3.

Recommended air quality for cylinders

For best possible service life and trouble-free operation, ISO 8573-1 quality class 3.4.3 should be used. This means 5 µm filter (standard filter) dew point +3 °C for indoor operation (a lower dew point should be selected for outdoor operation) and oil concentration 1.0 mg oil/m³, which is what a standard compressor with a standard filter gives.

ISO 8573-1 quality classes

Quality class	Pollution		Water	Oil
	particle size (µm)	max con-centration (mg/m³)	max press dew point (°C)	max con-centration (mg/m³)
1	0.1	0.1	-70	0.01
2	1	1	-40	0.1
3	5	5	-20	1.0
4	15	8	+3	5.0
5	40	10	+7	25.
6	-	-	+10	-

Additional data

Working pressure	max 10 bar
Working temperature	max +80 °C
	min –20 °C
High-temperature version	Ø10 to Ø16 max +120°C
	Ø20 to Ø25 max +150°C

Prelubricated, further lubrication is not normally necessary. If additional lubrication is introduced it must be continued.

Material specification

Piston rod	Stainless steel, X8 CrNiS 18-10 (AISI 321)
Piston rod bearing	Multilayer PTFE/steel
End covers	Stainless steel, X5 CrNi 18-10 (AISI 304)
O-ring, internal	Nitrile rubber, NBR
Cylinder barrel	Stainless steel, X5 CrNi 18-10 (AISI 304)
Magnet holder	Thermoplastic elastomer
Magnet	Plastic-coated magnetic material
Return spring	Surface-treated steel
Cushioning screw	Stainless steel, X10 CrNiS 18-9 (AISI 303)

Variants Mini ISO:

Standard-temperature version, type S:

Piston rod seal	Nitrile rubber, NBR
Piston complete	Nitrile rubber, NBR/steel

High-temperature version, type F:

Piston rod seal	Fluorocarbon rubber, FPM
Piston complete	HNBR/steel

Cylinders with outer sealings in fluorcarbon, type V:

Piston rod seal/ Scraper ring	Fluorocarbon rubber, FPM
Piston complete	Nitrile rubber, NBR/steel

Spare part = new cylinder

Cushioning diagram

Use the diagram below to determine the necessary size of cylinder to provide the requisite cushioning performance. The maximum cushioning performance, as indicated in the diagram, is based on the following assumptions:

- Low load, i.e. low pressure drop across the piston
- Steady-state piston speed
- Correctly adjusted cushioning screw

The load is the sum of the internal and external friction, together with any gravity forces. At high relative loading it is recommended that, for a given speed, the load should be reduced by a factor of 2.5, or that, for a given mass, the speed should be reduced by a factor of 1.5. These factors apply in relation to the maximum performance as shown in the diagram.

Fixed end-cushioning
Speed [m/s]

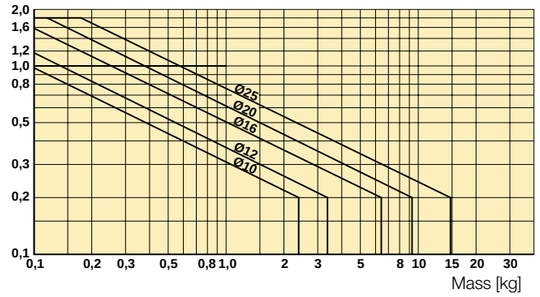

Adjustable pneumatic end-cushioning
Speed [m/s]

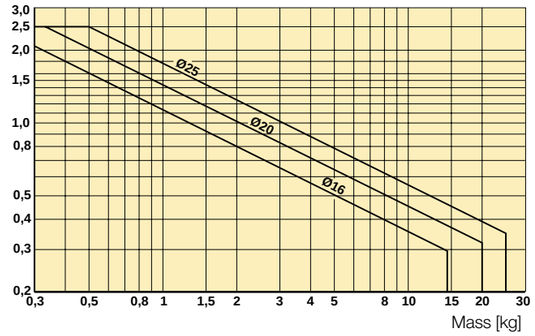

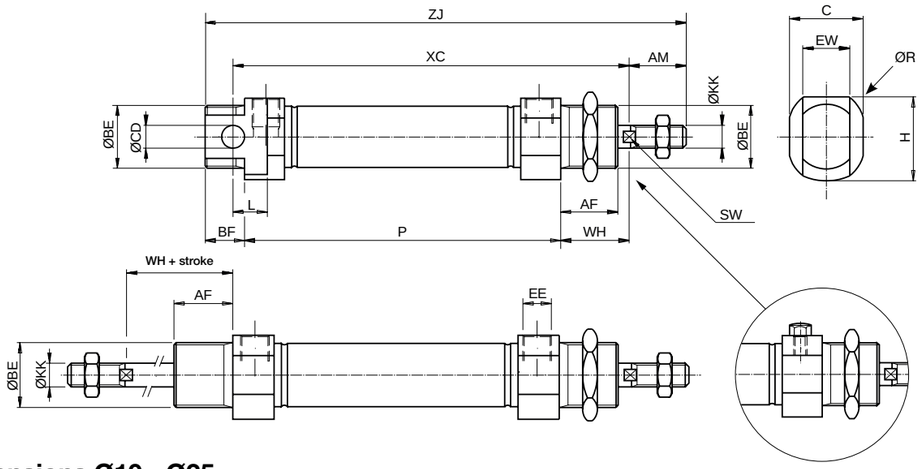

Dimensions Ø10 - Ø25

Cylinder bore mm	EE	Ø BE mm	Ø CD H9 mm	BF mm	L mm	AF mm	WH ±1,2 mm	AM 0/-2 mm	Ø KK mm	SW mm	C mm	EW mm	H mm	Ø R mm
10 [1]	M5	M12x1,25	4	10	6	12	16	12	M4	-	13,0	8	13,5	16,0
10 [2]	M5	M12x1,25	4	10	6	12	16	12	M4	-	13,0	8	14,0	16,0
12	M5	M16x1,50	6	13	9	18	22	16	M6	5	17,8	12	17,8	20,0
16	M5	M16x1,50	6	13	9	18	22	16	M6	5	17,8	12	17,8	20,0
20	G1/8	M22x1,50	8	14	12	20	24	20	M8	7	23,8	16	23,8	27,0
25	G1/8	M22x1,50	8	14	12	22	28	22	M10x1,25	9	26,8*	16	26,8*	31*

[1] SS / TS single acting [2] DS / MS double acting * For K_, SF, F_ version dimensions are 27,5 | 27,5 | Ø34

Double acting cylinders

Cylinder bore mm	ZJ mm	XC mm	P mm
10	84 + stroke	64 + stroke	46 + stroke
12	99 + stroke	75 + stroke	48 + stroke
16 [2]	104 + stroke	82 + stroke	53 + stroke
20 [2]	125 + stroke	95 + stroke	67 + stroke
25 [2]	132 + stroke	104 + stroke	68 + stroke

Single acting cylinders, spring return type S

Stroke Cyl. bore mm	10 XC mm	15 XC mm	25 XC mm	40 XC mm	50 XC mm	80 XC mm	10 ZJ mm	15 ZJ mm	25 ZJ mm	40 ZJ mm	50 ZJ mm	80 ZJ mm	10 P mm	15 P mm	25 P mm	40 P mm	50 p mm	80 P mm
10	74	79	89	126	136	174	94	99	109	146	156	194	56	61	71	108	118	156
12	85	90	100	132	142	185	109	114	124	156	166	209	58	63	73	105	115	158
16	92	97	107	122	132	184	114	119	129	144	154	206	63	68	78	93	103	155
20	105	110	120	135	145	191	135	140	150	165	175	221	77	82	92	107	117	163
25	114	119	129	144	154	201	142	147	157	172	182	229	78	83	93	108	118	165

Length tolerances ±1mm
Stroke length tolerances +1.5/0 mm

Cylinders are supplied complete with mounting and adjusting nuts. Cylinders with through piston rod are supplied complete with two adjusting nuts and one mounting nut.

Single acting cylinders, spring extend type T

Stroke Cyl. bore mm	10 XC[3] mm	15 XC[3] mm	25 XC[3] mm	40 XC[3] mm	50 XC[3] mm	80 XC[3] mm	10 ZJ[3] mm	15 ZJ[3] mm	25 ZJ[3] mm	40 ZJ[3] mm	50 ZJ[3] mm	80 ZJ[3] mm	10 P mm	15 P mm	25 P mm	40 P mm	50 p mm	80 P mm
16	107	112	122	137	147	-	129	134	144	159	169	-	78	83	93	108	118	-
20	120	125	135	150	160	195	150	155	165	180	190	225	92	97	107	122	132	167
25	129	134	144	159	169	205	157	162	172	187	197	233	93	98	108	123	133	169

[3] With piston rod retracted as shown in the dimension drawing Length tolerances ±1mm Stroke length tolerances +1.5/0 mm

Order key

P1S – S 016 M S – 0025

Cylinder bore mm

010
012
016
020
025

	Cylinder type / function
M	Double-acting, adjustable cushioning. Ø 20-25 mm. Not for sealing material type F.
D	Double-acting, non-adjustable cushioning, Ø10 - 25 mm
F	Double-acting, adjustable cushioning, thru-rod, Ø 20 - 25 mm. Not for sealing material type F.
K	Double-acting, non-adjustable cushioning, thru-rod, Ø10 - 25 mm
S	Single-acting, non-adjustable cushioning, spring return for retract stroke, Ø10 - 25 mm. Not for sealing material type type F & V.
T	Single-acting, non-adjustable cushioning, spring return for advance stroke, Ø16 - 25 mm. Not for sealing material type F & V.

Stroke in mm

E.g. **0025** = 25 mm
For standard stroke length and max length, see table below

	Sealing material
S	Standard, -20 °C to +80 °C. Magnetic piston
F	High temperature, Ø10 to Ø16 -10 to +120°C Ø20 to Ø25 -10 to +150°C Non-magnetic piston
V	External seals of fluorinated rubber. -20 °C to +80 °C. Magnetic piston

Stroke length

● Standard stroke length in mm ▭ Non standard stroke length

Cylinder designation	Cylinder bore	10	15	20	25*	30	40	50*	80*	100*	125*	160*	200*	250*	320*	400*	500*
Double acting with fixed end-cushioning:																	
P1S-S010D	10	●	●	●	●	●	●	●	●	●	●						
P1S-S012D	12	●	●	●	●	●	●	●	●	●	●	●	●				
P1S-S016D	16	●	●	●	●	●	●	●	●	●	●	●	●				
P1S-S020D	20	●	●	●	●	●	●	●	●	●	●	●	●	●	●		**
P1S-S025D	25	●	●	●	●	●	●	●	●	●	●	●	●	●	●		**
Double acting with adjustable end-cushioning:																	
P1S-S020M	20			●	●	●	●	●	●	●	●	●	●	●	●	●	● **
P1S-S025M	25			●	●	●	●	●	●	●	●	●	●	●	●	●	● **
Single acting, spring return:																	
P1S-S010SS	10	●	●		●		●	●	●								
P1S-S012SS	12	●	●		●		●	●	●								
P1S-S016SS	16	●	●		●		●	●	●								
P1S-S020SS	20	●	●		●		●	●	●								
P1S-S025SS	25	●	●		●		●	●	●								
Single acting, spring-extended:																	
P1S-S016TS	16	●	●		●		●	●									
P1S-S020TS	20	●	●		●		●	●	●								
P1S-S025TS	25	●	●		●		●	●	●								

* Standard stroke lengths in mm according to ISO 4393
** Max stroke 1000 mm

Guide for selecting suitable tubing

The selection of the correct size of tubing is often based on experience, with no great thought to optimizing energy efficiency and cylinder velocity. This is usually acceptable, but making a rough calculation can result in worthwhile economic gains.

The following is the basic principle:

1. The primary line to the working valve could be over sized (this does not cause any extra air consumption and consequently does not create any extra costs in operation).
2. The tubes between the valve and the cylinder should, however, be optimized according to the principle that an insufficient bore throttles the flow and thus limits the cylinder speed, while an oversized pipe creates a dead volume which increases the air consumption and filling time.

The chart below is intended to help when selecting the correct size of tube to use between the valve and the cylinder.

The following prerequisites apply:

The **cylinder load should be about 50%** of the theoretical force (= normal load). A lower load gives a higher velocity and vice versa. The tube size is selected as a function of the **cylinder bore**, the desired **cylinder velocity** and the **tube length** between the valve and the cylinder.

If you want to use the capacity of the valve to its maximum, and obtain maximum speed, the tubing should be chosen so that they at least correspond with the equivalent restriction diameter (see description below), so that the tubing does not restrict the total flow. This means that a short tubing must have at least the equivalent restriction diameter. If the tubing is longer, choose it from the table below. Straight fittings should be chosen for highest flow rates. (Elbow and banjo fittings cause restriction.)

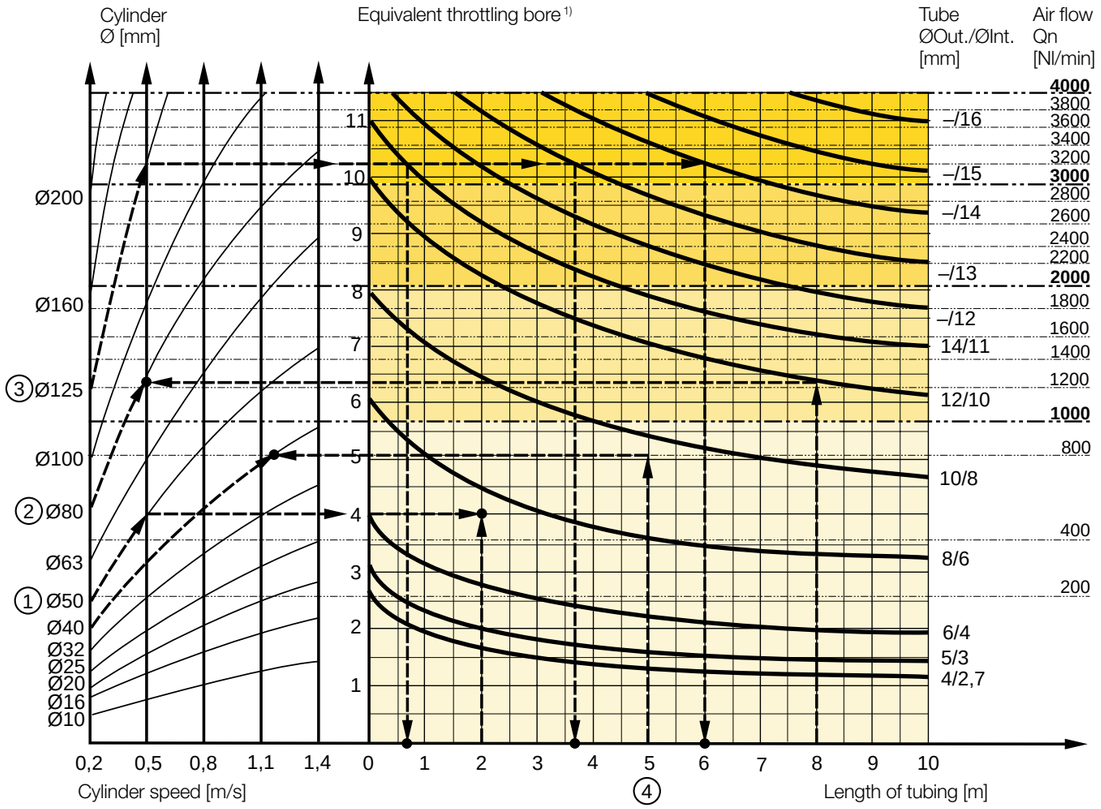

1) The "equivalent throttling bore" is a long throttle (for example a tube) or a series of throttles (for example, through a valve) converted to a short throttle which gives a corresponding flow rate. This should not be confused with the "orifice" which is sometimes specified for valves. The value for the orifice does not normally take account of the fact that the valve contains a number of throttles.

2) Qn is a measure of the valve flow capacity, with flow measured in litre per minute (l/min) at 6 bar(e) supply pressure and 1 bar pressure drop across the valve.

Example ①: Which tube diameter should be used?

A 50 mm bore cylinder is to be operated at 0.5 m/s. The tube length between the valve and cylinder is 2 m. In the diagram we follow the line from 50 mm bore to 0.5 m/s and get an "equivalent throttling bore" of approximately 4 mm. We continue out to the right in the chart and intersect the line for a 2 m tube between the curves for 4 mm (6/4 tube) and 6 mm(8/6 tube). This means that a 6/4 tube throttles the velocity somewhat, while an 8/6 tube is a little too large. We select the 8/6 tube to obtain full cylinder velocity.

Example ②: What cylinder velocity will be obtained?

A 80 mm bore cylinder will be used, connected by 8 m 12/10 tube to a valve with Qn 1200 Nl/min. What cylinder velocity will we get? We refer to the diagram and follow the line from 8 mm tube length up to the curve for 12/10 tube. From there, we go horizontally to the curve for the Ø80 cylinder. We find that the velocity will be about 0.5 m/s.

Example ③: What is the minimum inner diameter and maximum lenght of tube?

For a application a 125 mm bore cylinder will be used. Maximum velocity of piston rod is 0.5 m/s. The cylinder will be controlled by a valve with Qn 3200 Nl/min. What diameter of tube can be used and what is maximum lenght of tube.
We refer to the diagram. We start at the left side of the diagram cylinder Ø125. We follow the line until the intersection with the velocity line of 0.5 m/s. From here we draw a horizontal line in the diagram. This line shows us we need an equivalent throttling bore of approximately 10 mm. Following this line horizontally we cross a few intersections. These intersections shows us the minimum inner diameter (rightside diagram) in combination with the maximum length of tube (bottomside diagram).

For example:
Intersection one: When a tube (14/11) will be used, the maximum length of tube is 0.7 meter.
Intersection two: When a tube (—/13) will be used, the maximum length of tube is 3.7 meter.
Intersection three: When a tube (—/14) will be used, the maximum length of tube is 6 meter.

Example ④: Determining tube size and cylinder velocity with a particular cylinder and valve?

For an application using a 40 mm bore cylinder with a valve with Qn=800 Nl/min. The distance between the cylinder and valve has been set to 5 m.
Tube dimension: What tube bore should be selected to obtain the maximum cylinder velocity? Start at pipe length 5 m, follow the line up to the intersection with 800 Nl/min. Select the next largest tube diameter, in this case Ø10/8 mm.
Cylinder velocity: What maximum cylinder velocity will be obtained? Follow the line for 800 Nl/min to the left until it intersects with the line for the Ø40 mm cylinder. In this example, the speed is just above 1.1 m/s.

Valve series with respective flows in Nl/minute

Valve series	Qn in Nl/Min
Valvetronic Solstar	33
Interface PS1	100
Adex A05	173
Moduflex size 1, (2 x 3/2)	220
Valvetronic PVL-B 5/3 closed centre, 6 mm push in	290
Moduflex size 1, (4/2)	320
B43 Manual and mechanical	340
Valvetronic PVL-B 2 x 2/3, 6 mm push in	350
Valvetronic PVL-B 5/3 closed centre, G1/8	370
Compact Isomax DX02	385
Valvetronic PVL-B 2 x 3/2 G1/8	440
Valvetronic PVL-B 5/2, 6 mm push in	450
Valvetronic PVL-B 5/3 vented centre, 6 mm push in	450
Moduflex size 2, (2 x 3/2)	450
Flowstar P2V-A	520
Valvetronic PVL-B 5/3 vented centre, G1/8	540
Valvetronic PVL-B 5/2, G1/8	540
Valvetronic PVL-C 2 x 3/2, 8 mm push in	540
Adex A12	560
Valvetronic PVL-C 2 x 3/2 G1/8	570
Compact Isomax DX01	585
VIKING Xtreme P2LAX	660
Valvetronic PVL-C 5/3 closed centre, 8 mm push in	700
Valvetronic PVL-C 5/3 vented centre, G1/4	700
B3-Series	780
Valvetronic PVL-C 5/3 closed centre, G1/4	780
Moduflex size 2, (4/2)	800
Valvetronic PVL-C 5/2, 8 mm push in	840
Valvetronic PVL-C 5/3 vented centre, 8 mm push in	840
Valvetronic PVL-C 5/2, G1/4	840
Flowstar P2V-B	1090
ISOMAX DX1	1150
B53 Manual and mechanical	1160
B4-Series	1170
VIKING Xtreme P2LBX	1290
B5-Series, G1/4	1440
Airline Isolator Valve VE22/23	1470
ISOMAX DX2	2330
VIKING Xtreme P2LCX, G3/8	2460
VIKING Xtreme P2LDX, G1/2	2660
ISOMAX DX3	4050
Airline Isolator Valve VE42/43	5520
Airline Isolator Valve VE82/83	13680

Cylinder mountings

Type	Description	Cyl. bore Ø mm	Weight kg	Order code
Stainless flange MF8	Intended for fixed attachment of the cylinder. The flange is designed for mounting on the front or rear end-covers. Material: Stainless steel, X10 CrNiS 18-9 (AISI 303)	10 12-16 20-25	0.012 0.025 0.045	**P1S-4CMB** **P1S-4DMB** **P1S-4HMB**

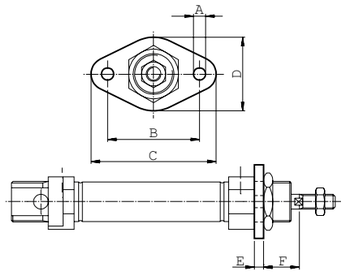

Cylinder Ø mm	A mm	B mm	C mm	D mm	E mm	F mm
10	4.5	30	40	22	3	13
12-16	5.5	40	52	30	4	18
20	6.6	50	66	40	5	19
25	6.6	50	66	40	5	23

Stainless foot MS3	Intended for fixed attachement of the cylinder. The bracket is designed for mounting on the front or rear end-covers. Material: Stainless steel, X10 CrNiS 18-9 (AISI 303)	10 12-16 20-25	0.020 0.040 0.080	**P1S-4CMF** **P1S-4DMF** **P1S-4HMF**

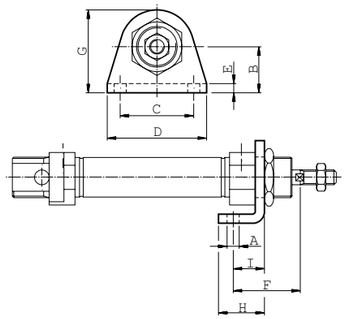

Cylinder Ø mm	A mm	B mm	C mm	D mm	E mm	F mm	G mm	H mm	I mm
10	4.5	16	25	35	3	24	26	16	11
12-16	5.5	20	32	42	4	32	32.5	20	14
20	6.6	25	40	54	5	36	45	25	17
25	6.6	25	40	54	5	40	45	25	17

Stainless Cover trunnion	Intended for articulated mounting of the cylinder. The flange is designed for mounting on the front or rear end-covers. Material: Stainless steel, X10 CrNiS 18-9 (AISI 303)	10 12-16 20-25	0.014 0.033 0.037	**P1A-4CMJ** **P1A-4DMJ** **P1A-4HMJ**

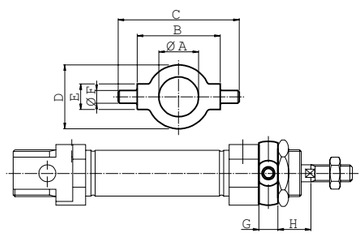

Cylinder Ø mm	A mm	B h14 mm	C mm	D mm	E e9 mm	F mm	G mm	H mm
10	12.5	26	38	20	8	4	6	10
12-16	16.5	38	58	25	10	6	8	14
20	22.5	46	66	30	10	6	8	16
25	22.5	46	66	30	10	6	8	20

Cylinder mountings

Type	Description	Cyl. bore Ø mm	Weight kg	Order code
Stainless Neck nut MR3	Intended for fixed mounting of the cylinder. Cylinders are supplied complete with one mounting nut. Material: Stainless steel, X5 CrNi 18-10 (AISI 304)	10 12-16 20-25	0.009 0.018 0.042	**9126725405** **9126725406** **9126725407**

Cylinder Ø mm	A mm	B mm	C
10	19	6	M12x1,25
12-16	24	8	M16x1,50
20-25	27	5	M22x1,50

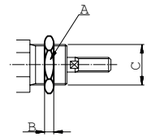

Stainless Clevis bracket AB3	Intended for articulated mounting of the cylinder. Supplied with shaft for mounting on the rear end cover. Material: Bracket: stainless steel, X5 CrNi 18-10 (AISI 304) Pin: tempered stainless steel, X 20 Cr 13 (AISI 420) Locking rings: stainless steel, X5 CrNi 18-10 (AISI 304)	10 12-16 20-25	0.020 0.040 0.080	**P1S-4CMT** **P1S-4DMT** **P1S-4HMT**

Cylinder Ø mm	A mm	B mm	C mm	D mm	E mm	F mm	G mm	H mm	I °	J °
10	4,5	13	8.1	24	12,5	20	65.3	5	160	17
12	5.5	18	12.1	27	15	25	73	7	170	15
16	5.5	18	12.1	27	15	25	80	7	170	15
20	6.6	24	16.1	30	20	32	91	10	165	10
25	6.6	24	16.1	30	20	32	100	10	165	10

S = stroke

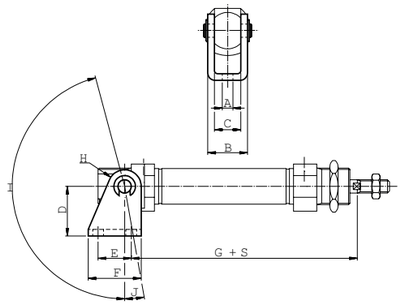

Stainless Clevis AP2	According to ISO 8140 Intended for articulated mounting of the cylinder. This mounting is adjustable in the axial direction. Supplied complete with pin. Material: Stainless steel, X5 CrNi 18-10 (AISI 304)	10 12-16 20 25	0.007 0.022 0.045 0.095	**P1S-4CRD** **P1S-4DRD** **P1S-4HRD** **P1S-4JRD**

Cylinder Ø mm	A mm	B	C mm	D mm	E mm	F mm	G mm	H mm	I mm	J mm
10	4	M4	2.2	8	8	5	16	4	22	2
12-16	6	M6	3.2	12	12	7	24	6	31	3
20	8	M8	4	16	16	10	32	8	40.5	3.5
25	10	M10x1.25	5	20	20	12	40	10	49	3

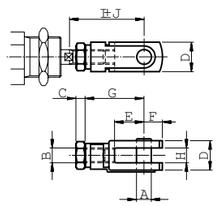

Cylinder mountings

Type	Description	Cyl. bore Ø mm	Weight kg	Order code
Stainless Swivel rod eye AP6	According to ISO 8139 Intended for articulated mounting of the cylinder. This mounting is adjustable in the axial direction. Material: Swivel rod eye: stainless steel, X5 CrNi 18-10 (AISI 304) Ball: hardened stainless steel, X5 CrNi 18-10 (AISI 304)	10	0.017	**P1S-4CRT**
		12-16	0.025	**P1S-4DRT**
		20	0.045	**P1S-4HRT**
		25	0.085	**P1S-4JRT**

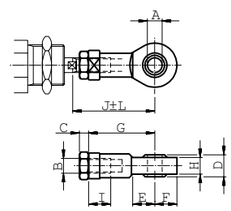

Cylinder Ø mm	A mm	B	C mm	D mm	E mm	F mm	G mm	H mm	I mm	J mm	K mm	L mm
10	5	M4	2.2	8	10	9	27	6	8	33	9	2
12-16	6	M6	3.2	9	10	10	30	6.8	9	38.5	11	1.5
20	8	M8	4	12	12	12	36	9	12	46	14	2
25	10	M10x1.25	5	14	14	14	43	10.5	15	52.5	17	2.5

Stainless Rod nut MR9	Intended for fixed mounting on the piston rod. Cylinders are supplied complete with one rod nut. (cylinders with through piston rod are supplied with two rod nuts.) Material: Stainless steel, X5 CrNi 18-10 (AISI 304)	10	0.001	**9127385121**
		12-16	0.002	**9127385122**
		20	0.005	**9127385123**
		25	0.007	**9126725404**

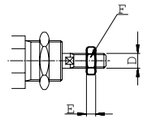

Cylinder Ø mm	D	F mm	E mm
10	M4	7	2.2
12-16	M6	10	3.2
20	M8	13	4
25	M10x1.25	17	5

Main data: ISO 6431

Cylinder designation	Cylinder bore mm	area cm²	diam. mm	Piston rod area cm²	thread	Cushioning distance mm	Total mass at 0 mm stroke kg	addition per 10 mm stroke kg	Moving mass at 0 mm stroke kg	addition per 10 mm stroke kg	Air Consumption litres	Port thread
P1S-•032M	32	8.0	12	1.1	M10x1.25	15	0.59	0.026	0.10	0.009	0.105 1)	G1/8
P1S-•040M	40	12.6	16	2.0	M12x1.25	18	0.99	0.036	0.19	0.016	0.162 1)	G1/4
P1S-• 050M	50	19.6	20	3.1	M16x1.5	19	1.63	0.057	0.32	0.024	0.253 1)	G1/4
P1S-•063M	63	31.2	20	3.1	M16x1.5	22	2.75	0.065	0.36	0.024	0.414 1)	G3/8
P1S-•080M	80	50.3	25	4.9	M20x1.5	24	5.09	0.099	1.11	0.039	0.669 1)	G3/8
P1S-•100M	100	78.5	25	4.9	M20x1.5	29	8.68	0.115	1.41	0.039	1.043 1)	G1/2
P1S-•125M	125	122.7	32	8.0	M27x2	32	15.31	0.174	2.90	0.063	1.662 1)	G1/2

1) Free air consumption per 10 mm stroke length for a double stroke at 600 kPa (6 bar)

Cylinder forces

Indicated cylinder forces are theoretical and should be reduced in relation to working conditions.

Cylinder designation	Theoretical cylinder force at 600 kPa (6 bar) exp. stroke N	return stroke N
P1S-•032M	480	415
P1S-•040M	754	633
P1S-•050M	1180	990
P1S-•063M	1870	1680
P1S-•080M	3016	2721
P1S-•100M	4712	4417
P1S-•125M	7363	6880

Working medium, air quality

Working medium: Dry, filtered compressed air to ISO 8573-1 class 3.4.3.

Recommended air quality for cylinders

For best possible service life and trouble-free operation, ISO 8573-1 quality class 3.4.3 should be used. This means 5 µm filter (standard filter) dew point +3 °C for indoor operation (a lower dew point should be selected for outdoor operation) and oil concentration 1.0 mg oil/m³, which is what a standard compressor with a standard filter gives.

ISO 8573-1 quality classes

Quality class	Pollution particle size (µm)	max con-centration (mg/m³)	Water max. press. dew point (°C)	Oil max con-centration (mg/m³)
1	0.1	0.1	-70	0.01
2	1	1	-40	0.1
3	5	5	-20	1.0
4	15	8	+3	5.0
5	40	10	+7	25
6	-	-	+10	-

Additional data

Working pressure	max	10 bar
Working temperature	max	+80 °C
	min	–20 °C
High-temperature version	max	+150 °C
	min	–10 °C

Prelubricated, further lubrication is not normally necessary. If additional lubrication is introduced it must be continued.

Cushioning diagram

Use the diagram below to determine the necessary size of cylinder to provide the requisite cushioning performance. The maximum cushioning performance, as indicated in the diagram, is based on the following assumptions:

- Low load, i.e. low pressure drop across the piston
- Steady-state piston speed
- Correctly adjusted cushioning screw

The load is the sum of the internal and external friction, together with any gravity forces. At high relative loading it is recommended that, for a given speed, the load should be reduced by a factor of 2.5, or that, for a given mass, the speed should be reduced by a factor of 1.5. These factors apply in relation to the maximum performance as shown in the diagram.

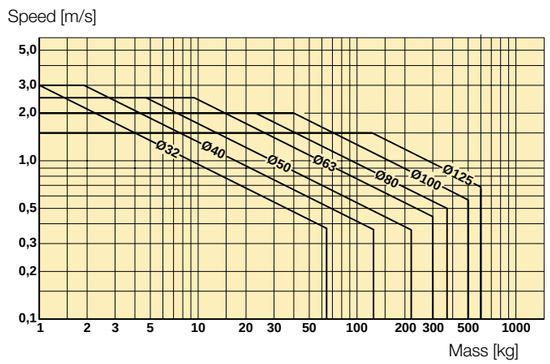

Order key

P1S – D 032 M S – 0025 – EXNN

	Cylinder version
C	Threaded front end
D	Threaded front end + 4 mounting holes in the rear end cover
E	Round front end cover + 4 mounting holes Ø 80 - Ø 125
F	Round front end cover + 4 mounting holes the rear end cover
L	Round front end cover + 4 mounting holes in the front + 4 in the rear end covers Ø 80 - Ø 125

Cylinder bore mm
032
040
050
063
080
100
125

	Cylinder type/Function
M	Double acting, adjustable pneumatic cushioning

ATEX
Add for ATEX certified product

Stroke in mm
E.g. **0025** = 25 mm
For standard stroke length and max length, see table below

	Sealing material
S	Standard, -20 °C to +80 °C Magnetic piston
F	High temperature, -10 °C to +150 °C Non magnetic piston

Stroke length

● Standard stroke length in mm according to ISO 4393 — Non standard stroke length

Cylinder designation	Cylinder bore	25	50	80	100	125	160	200	250	320	400	500
P1S-•032M	32	●	●	●	●	●	●	●	●	●	●	●
P1S-•040M	40	●	●	●	●	●	●	●	●	●	●	●
P1S-•050M	50	●	●	●	●	●	●	●	●	●	●	●
P1S-•063M	63	●	●	●	●	●	●	●	●	●	●	●
P1S-•080M	80	●	●	●	●	●	●	●	●	●	●	●
P1S-•100M	100	●	●	●	●	●	●	●	●	●	●	●
P1S-•125M	125	●	●	●	●	●	●	●	●	●	●	●

CE Ex II 2GD c T4 120 °C

P1S-C***MS-****-EXNN
P1S-D***MS-****-EXNN
P1S-E***MS-****-EXNN
P1S-F***MS-****-EXNN
P1S-L***MS-****-EXNN

All strokes in the range 25 - 1000 mm

Threaded front end

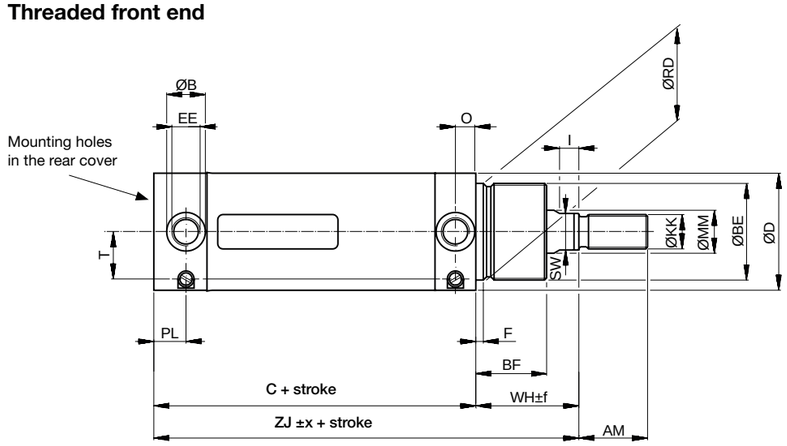

Mounting holes in the rear cover

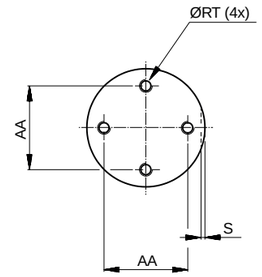

Basic cylinder

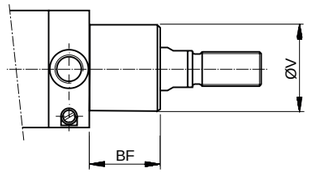

Dimensions Ø32 - Ø63

Cylinder designation	AA mm	AM mm	B mm	BF mm	BE	C mm	D mm	EE	F mm	I mm	KK	MM mm	O mm	PL mm	RD mm	RT mm
P1S-D032M	24.5	22	15	25	M30x1.5	88	36	G1/8	4.2	6	M10x1.25	12	8	13	30	M5
P1S-D040M	30	24	18	30	M38x1.5	97	44	G1/4	4.5	9	M12x1.25	16	9.5	15	38	M6
P1S-D050M	39	32	18	33	M45x1.5	101	55	G1/4	4.5	9	M16x1.5	20	9.5	15	45	M6
P1S-D063M	49	32	25	33	M45x1.5	117	68	G3/8	4.5	9	M16x1.5	20	13.3	20.5	45	M8

Cylinder designation	S mm	SW mm	T mm	V mm	WH mm	ZJ mm	Mounting tolerances x mm	Mounting tolerances f mm	Stroke length 0-500 mm mm
P1S-D032M	1.5	10	12.2	26	35.5	123.5	1.2	2.5	+2.0
P1S-D040M	1.5	14	16.5	35	44	141	1.0	2.2	+2.0
P1S-D050M	1.5	17	22	41	47	148	0.9	2.3	+2.0
P1S-D063M	1.5	17	26	41	47	164	1.4	2.3	+2.5

Material specification Ø32 - Ø63

Piston rod	Stainless steel, X2 CrNiMo 17-13-2 (AISI 316L)
Piston rod nut	Stainless steel, X5 CrNi 18-10 (AISI 304)
Piston rod seal	UHMWPE-plastic/NBR
Scraper ring	UHMWPE-plastic/fluorocarbon rubber, FPM
Piston rod bearing	HDPE-plastic
End covers	Stainless steel, X5 CrNi 18-10 (AISI 304)
Cushioning screw	Stainless steel, X10 CrNiS 18-9 (AISI 303)
Cushioning screw lockings	Stainless steel, X5 CrNi 18-10 (AISI 304)
Cushioning sealing	NBR
O-ring, cushioning screw	Fluorocarbon, FPM
O-ring, internal	NBR
Cylinder barrel	Stainless steel, X5 CrNi 18-10 (AISI 304)
Piston	POM plastic
Piston seal	NBR
Piston nut	Zinc plated steel
Magnet	Plastic-coated magnetic material

Variants Ø32 - Ø63

High-temperature version, type F:

Sealings/scraper ring fluorocarbon rubber, FPM
Piston anodized aluminium

Basic cylinder

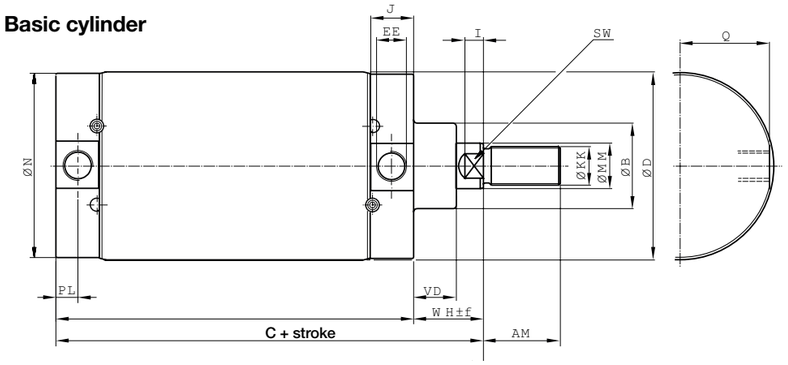

Threaded front end

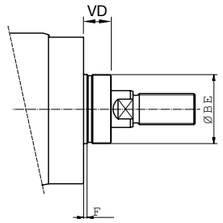

Mounting holes in the end covers (front and rear)

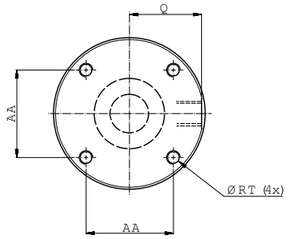

Dimensions Ø80 - Ø125

Cylinder designation	AA mm	AM mm	B mm	BE	C mm	D mm	EE	F mm	KK	I mm	J mm	MM mm	N mm	PL mm	Q mm
P1S-•080M	46	40	50	M50x1.5	141	86	G3/8	4	M20x1.5	10	24.5	25	84	12.5	40
P1S-•100M	60	40	50	M50x1.5	158	106	G1/2	4	M20x1.5	8	30	25	104	15.5	49.5
P1S-•125M	76	54	60	M60x2	183	133	G1/2	4	M27x2	13	30	32	129	15.5	62.5

Cylinder designation	RT mm	SW mm	VD mm	WH mm	Mounting tol. x mm	f mm	Stroke length 0-500 mm
P1S-•080M	M8	21	19	37	1.5	2.5	+2.5
P1S-•100M	M10	21	19	35	1.5	2.5	+2.5
P1S-•125M	M12	27	24	47	2.0	2.5	+4.0

Material specification Ø80 - Ø125

Piston rod	Stainless steel, X2 CrNiMo 17-13-2 (AISI 316L)
Piston rod nut	Acid-proof steel, A4
Piston rod seal	FPM
Scraper ring	PTFE
Piston rod bearing	Multilayer PTFE and steel
End covers	Stainless steel, X5 CrNi 18-10 (AISI 304)
Cushioning screw	Stainless steel, X10 CrNiS 18-9 (AISI 303)
Cushioning sealing	NBR
O-ring, cushioning screw	Fluorocarbon, FPM
O-ring, internal	NBR
Cylinder barrel	Stainless steel, X5 CrNi 18-10 (AISI 304)
Piston	Anodized aluminium
Piston seal	NBR
Piston bearing	UHMWPE-plastic
Magnetic band	Rubber-coated magnetic material

Variants Ø80 - Ø125

High-temperature version, type F:

Sealings/scraper ring	Fluorocarbon rubber, FPM/PTFE

Cylinder mountings Ø32 - Ø63

Type	Description	Cyl. bore Ø mm	Weight kg	Order code
Stainless clevis bracket MP4	Intended for articulated mounting of the cylinder versions D or F. The bracket is mounted at the rear end cover and is supplied complete with shaft, mounting screw and O-ring for a clean joint between end cover and bracket. Material: Stainless steel, X5 CrNi 18-10 (AISI 304)	32	0.09	**P1S-4KME**
		40	0.12	**P1S-4LME**
		50	0.19	**P1S-4MME**
		63	0.34	**P1S-4NME**

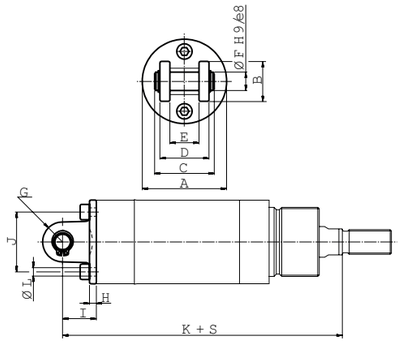

Cylinder Ø mm	A mm	B mm	C mm	D mm	E mm	F mm	G mm	H mm	I mm	J mm	K mm	L mm
32	35.5	20	33	26	15	10	10	4.5	18.5	25	142	5.5
40	43.5	24	35	28	17	12	12	4	19	30	160	6.5
50	54.5	26	39	32	17	12	13	4.5	22	39	170	6.5
63	67.5	34	47	40	22	16	17	6	26	49	190	8.6

S = Stroke

Stainless neck nut MR3	Intended for fixed mounting of the cylinder via the neck. Material: stainless steel, X5 CrNi 18-10 (AISI 304)	32	0.03	**9127294401**
		40	0.06	**9127294402**
		50-63	0.08	**9127294403**

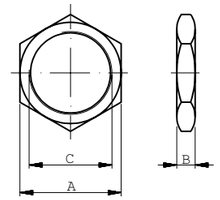

Cylinder Ø mm	A mm	B mm	C
32	36	8	M30x1.5
40	46	10	M38x1.5
50	55	10	M45x1.5
63	55	10	M45x1.5

Cylinder mountings Ø32 - Ø125

Type	Description	Cyl. bore Ø mm	Weight kg	Order code
Acid-proof rod nut MR9	Intended for fixed mounting on the piston rod. Cylinders are supplied complete with one rod nut. (cylinders with through piston rods are supplied with two rod nuts.) Material: Acid-proof steel A4	32	0.007	**P14-4KRPX**
		40	0.010	**P14-4MRPX**
		50	0.021	**P14-4MRPX**
		63	0.021	**P14-4MRPX**
		80	0.040	**P14-4PRPX**
		100	0.040	**P14-4PRPX**
		125	0.100	**P14-4RRPX**
Stainless rod nut MR9	Intended for fixed mounting of accessories to the piston rod. Material: Stainless steel, A2	32	0.007	**P14-4KRPS**
		40	0.010	**P14-4LRPS**
		50	0.021	**P14-4MRPS**
		63	0.021	**P14-4MRPS**
		80	0.040	**P14-4PRPS**
		100	0.040	**P14-4PRPS**
		125	0.100	**P14-4RRPS**

Cylinder Ø mm	A mm	B mm	C
32	17	5	M10x1.25
40	19	6	M12x1.25
50	24	8	M16x1.5
63	24	8	M16x1.5
80	30	10	M20x1.5
100	30	10	M20x1.5
125	41	13.5	M27x2

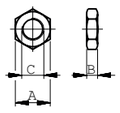

Supplied as pack of 10 off
weight per item

Cylinder mountings Ø32 - Ø125

Type	Description	Cyl. bore Ø mm	Weight kg	Order code
Stainless swivel rod eye AP6	According to ISO 8139 Intended for articulated mounting of the cylinder. This mounting is adjustable in the axial direction. Materal: Swivel rod eye: stainless steel, X5 CrNi 18-10 (AISI 304) Ball: hardened stainless steel, X5 CrNi 18-10 (AISI 304)	32 40 50-63 80-100 125	0.08 0.12 0.25 0.46 1.28	**P1S-4JRT** **P1S-4LRT** **P1S-4MRT** **P1S-4PRT** **P1S-4RRT**

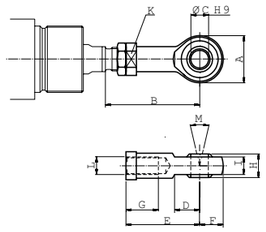

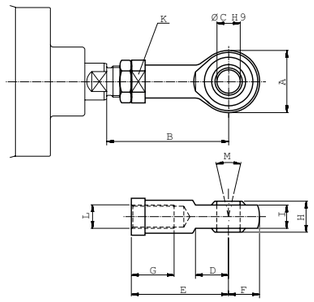

Cyl. Ø mm	A mm	B_{min} mm	B_{max} mm	C mm	D mm	E mm	F mm	G mm	H mm	I mm	K mm	L	M
32	28	50	55	10	15	43	14	15	14	10.5	17	M10x1.25	24°
40	32	56	62	12	17	50	16	22	16	12	19	M12x1.25	24°
50	42	72	80	16	22	64	21	28	21	15	22	M16x1.5	30°
63	42	72	80	16	22	64	21	28	21	15	22	M16x1.5	30°
80	50	87	97	20	26	77	25	33	25	18	32	M20x1.5	30°
100	50	87	97	20	26	77	25	33	25	18	32	M20x1.5	30°
125	70	123.5	137	30	36	110	35	51	37	25	41	M27x2	30°

Stainless clevis AP2	According to ISO 8140 Intended for articulated mounting of the cylinder. This mounting is adjustable in the axial direction. Supplied complete with pin. Material: Clevis: stainless steel, X10 CrNiS 18-9 (AISI 303) Pin: stainless steel, X5 CrNi 18-10 (AISI 304) Locking rings according to DIN 471	32 40 50-63 80-100 125	0.09 0.15 0.35 0.75 2.10	**P1S-4JRD** **P1S-4LRD** **P1S-4MRD** **P1S-4PRD** **P1S-4RRD**

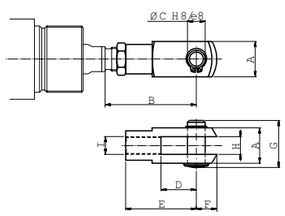

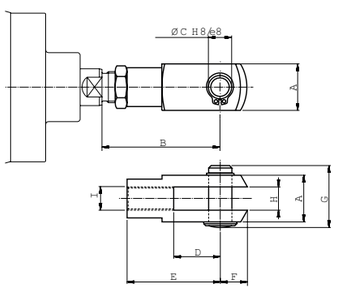

Cylinder Ø mm	A mm	B_{min} mm	B_{max} mm	C mm	D mm	E mm	F mm	G mm	H mm	I
32	20	46	52	10	20	40	12	28	10	M10x1.25
40	24	54	60	12	24	48	19	32	12	M12x1.25
50	32	72	80	16	32	64	25	42	16	M16x1.5
63	32	72	80	16	32	64	25	42	16	M16x1.5
80	40	90	100	20	40	80	32	50	20	M20x1.5
100	40	90	100	20	40	80	32	50	20	M20x1.5
125	55	123.5	137	30	54	110	45	72	30	M27x2

Cylinder mountings

Type	Description	Cyl. bore Ø mm	Weight kg	Order code
Stainless flange MF1/MF2	Intended for fixed attachment of cylinder version D, E, F, or L. The flange is designed for mounting on the front or rear end covers. Material: Stainless steel, X3 CrNiMo 17-13-3 (AISI 316)	80 100 125	0.97 1.42 1.55	**P1S-4PMB** **P1S-4QMB** **P1S-4RMB**

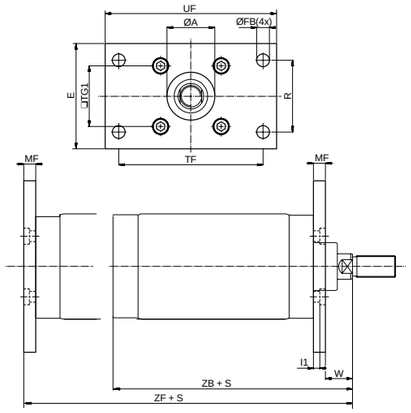

Cylinder Ø mm	A mm	FB mm	E mm	R mm	TF mm	TG1 mm	UF mm	MF mm	I1 mm	W mm	ZB mm	ZF mm
80	50.2	12	86	63	126	46	150	12	6	25	178	190
100	51	14	106	75	150	60	170	12	6	23	193	205
125	61	16	132	90	180	76	205	15	8	32	230	245

S = Stroke

Stainless clevis bracket MP4	Intended for articulated mounting of cylinder versions D, F or L. The bracket is mounted on the rear end cover and is supplied complete with shaft, mounting screw and O-ring for a clean joint between end cover and bracket. Material: Bracket: stainless steel, X5 CrNi 18-10 (AISI 304) Pin: stainless steel, X3 CrNiMo 17-13-3 (AISI 316)	80 100 125	0.78 1.42 2.06	**P1S-4PME** **P1S-4QME** **P1S-4RME**

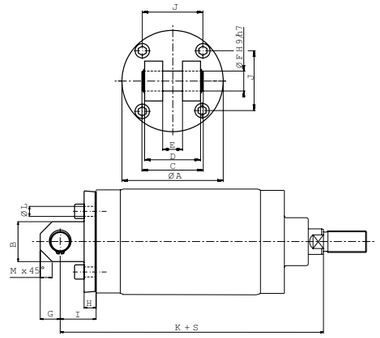

Cylinder Ø mm	A mm	B mm	C mm	D mm	E mm	F mm	G mm	H mm	I mm	J mm	K mm	L mm	M mm
80	80	30	57	50	16	16	15	12	32	46	210	8.6	9
100	103	42	67	60	20	20	21	12	37	60	230	10.6	12
125	127	50	77	70	25	25	25	15	45	76	275	12.6	15

S = Stroke

Stainless Neck nut MR3	Intended for fixed mounting on the front end cover of cylinders according to cylinder version C or D. Material: Stainless steel, X5 CrNi 18-10 (AISI 304)	80-100 125	0.16 0.19	**9126461304** **9126461305**

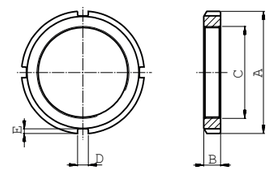

Cylinder Ø mm	A mm	B mm	C	D mm	E mm
80	70	11	M50x1.5	6	2.5
100	70	11	M50x1.5	6	2.5
125	80	11	M60x2	7	3

Cylinder mountings

Type	Description	Cyl. bore Ø mm	Weight kg	Order code
Combinated mounting MP2/MP4	Intended for articulated mounting of cylinder versions D, F or L. The unit is mounted on the rear end cover and is combined with bearing brackets MP2 and is supplied complete with shaft, mounting screw and O-ring for a clean joint between end cover and bracket. Material: Bearing brackets: stainless steel, DIN X 5 CrNi 18 10 Journal bearing: stainless steel, Journal bearing: DIN X 5 CrNiMo 17 13 3/PTFE Bracket: stainless steel, X5 CrNi 18-10 (AISI 304) Pin: stainless steel, X3 CrNiMo 17-13-3 (AISI 316)	80 100 125	1.29 2.33 3.30	**P1S-4PML** **P1S-4QML** **P1S-4RML**

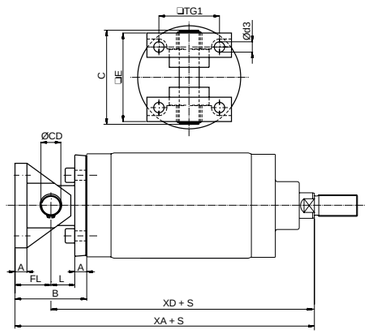

Cylinder Ø mm	A mm	B mm	C mm	CD mm	d3 mm	E mm	FL mm	L mm	TG1 mm	XA mm	XD mm
80	12	64	82	16	9	74	32	20	46	242	210
100	12	74	98	20	11	90	37	25	60	267	230
125	15	90	118	25	13	110	45	30	76	320	275

S = Stroke

Our global series of sensors

This series of sensors is already being used or will be used in all future ranges in our global product programme involving cylinders/actuators. The sensors have small installation dimensions and either fit into the groove in the case profile or, as shown here, are fastened to the cylinder using a special attachment.
You can choose from electronic or reed sensors with a range of cable lengths fitted with 8 mm or M12 terminals.

Electronic sensors

The new electronic sensors are "Solid State", i.e. they have no moving parts at all. They are provided with short-circuit protection and transient protection as standard. The built-in electronics make the sensors suitable for applications with high on and off switching frequency, and where very long service life is required.

Technical data

Design	GMR (Giant Magnetic Resistance) magneto-resistive function
Installation	Sensor mounting P8S-TMC01
Outputs	PNP, normally open (also available in NPN design, normally closed, on request)
Voltage range	10-30 VDC 10-18 V DC, ATEX sensor
Ripple	max 10%
Voltage drop	max 2,5 V
Load current	max 100 mA
Internal consumption	max 10 mA
Actuating distance	min 9 mm
Hysteresis	max 1,5 mm
Repeatability accuracy	max 0,2 mm
On/off switching frequency	max 5 kHz
On switching time	max 2 ms
Off switching time	max 2 ms
Encapsulation	IP 67 (EN 60529)
Temperature range	–25 °C to +75 °C –20 °C to +45 °C, ATEX sensor
Indication	LED, yellow
Material housing	PA 12
Material screw	Stainless steel
Cable	PVC or PUR 3x0.25 mm^2 see order code respectively

Reed sensors

The sensors are based on proven reed switches, which offer reliable function in many applications. Simple installation, a protected position on the cylinder and clear LED indication are important advantages of this range of sensors.

Technical data

Design	Reed element
Mounting	Sensor mounting P8S-TMC01
Output	Normally open , or normally closed
Voltage range	10-30 V AC/DC or 10-120 V AC/DC 24-230 V AC/DC
Load current	max 500 mA for 10-30 V or max 100 mA for 10-120 V max 30 mA for 24-230 V
Breaking power (resistive)	max 6 W/VA
Actuating distance	min 9 mm
Hysteresis	max 1,5 mm
Repeatability accuracy	0,2 mm
On/off switching frequency	max 400 Hz
On switching time	max 1,5 ms
Off switching time	max 0,5 ms
Encapsulation	IP 67 (EN 60529)
Temperature range	–25 °C to +75 °C
Indication	LED, yellow
Material housing	PA12
Material screw	Stainless steel
Cable	PVC or PUR 3x0.14 mm^2 see order code respectively

Electronic sensors

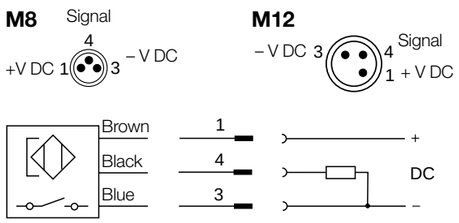

Reed sensors

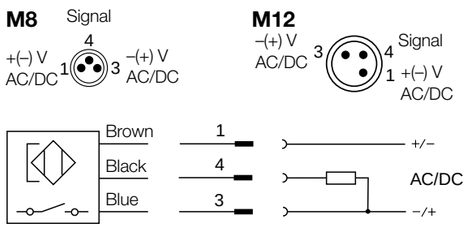

P8S-GCFPX

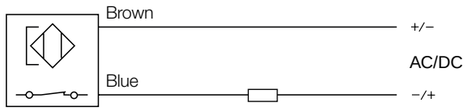

P8S-GRFLX / P8S-GRFLX2

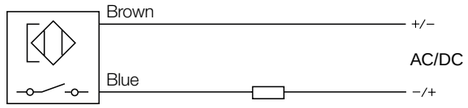

Dimensions

Sensors

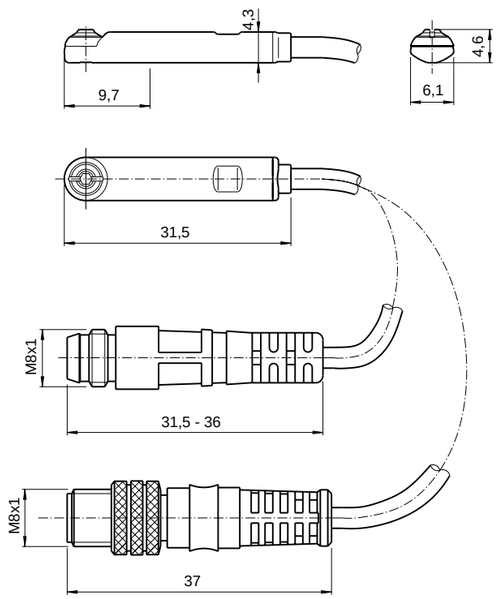

Sensor mounting P8S-TMC**

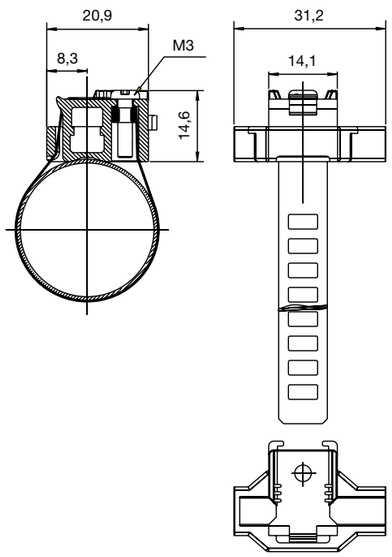

Ordering data

Output/function	Cable/connector	Weight kg	Order code
Electronic sensors , 10-30 V DC			
PNP type, normally open	0.27 m PUR-cable and 8 mm snap-in male connector	0.007	**P8S-GPSHX**
PNP type. normally open	0.27 m PUR-cable and M12 screw male connector	0.015	**P8S-GPMHX**
PNP type. normally open	3 m PVC-cable without connector	0.030	**P8S-GPFLX**
PNP type. normally open	10 m PVC-cable without connector	0.110	**P8S-GPFTX**
Electronic sensor 18-30 V DC ATEX-certified			
CE Ex **II3G EEx nA II T4X II3D 135 °C IP67**			
Type PNP , normally open	3 m PVC-cable without connector	0,030	**P8S-GPFLX/EX**
Reed sensors , 10-30 V AC/DC			
Normally open	0.27 m PUR-cable and 8 mm snap-in male connector	0.007	**P8S-GSSHX**
Normally open	0.27 m PUR-cable and M12 screw male connector	0.015	**P8S-GSMHX**
Normally open	3 m PVC-cable without connector	0.030	**P8S-GSFLX**
Normally open	10 m PVC-cable without connector	0.110	**P8S-GSFTX**
Normally closed	5m PVC-cable without connector [1]	0.050	**P8S-GCFPX**
Reed sensors. 10-120 V AC/DC			
Normally open	3 m PVC-cable without connector	0.030	**P8S-GRFLX**
Reed sensorer, 24-230 V AC/DC			
Normally open	3 m PVC-cable without connector	0.030	**P8S-GRFLX2**

1) Without LED

Sensor mounting

Description	Weight kg	Order code
Sensor mounting for cylinder P1S cylinder bore Ø10 to Ø25 mm	0.07	**P8S-TMC01**
Sensor mounting for cylinder P1S cylinder bore Ø32 to Ø63 mm	0.07	**P8S-TMC02**
Sensor mounting for cylinder P1S cylinder bore Ø80 to Ø125 mm	0.07	**P8S-TMC03**

Connecting cables with one connector

The cables have an integral snap-in female connector.

Type of cable	Cable/connector	Weight kg	Order code
Cables for sensors, complete with one female connector			
Cable, Flex PVC	3 m, 8 mm Snap-in connector	0.07	**9126344341**
Cable, Flex PVC	10 m, 8 mm Snap-in connector	0.21	**9126344342**
Cable, Polyurethane	3 m, 8 mm Snap-in connector	0.01	**9126344345**
Cable, Polyurethane	10 m, 8 mm Snap-in connector	0.20	**9126344346**
Cable, Polyurethane	5 m, M12 screw connector	0.07	**9126344348**
Cable, Polyurethane	10 m, M12 screw connector	0.20	**9126344349**

Male connectors for connecting cables

Cable connectors for producing your own connecting cables. The connectors can be quickly attached to the cable without special tools. Only the outer sheath of the cable is removed. The connectors are available for M8 and M12 screw connectors and meet protection class IP 65.

Connector	Weight kg	Order code
M8 screw connector	0.017	**P8SCS0803J**
M12 screw connector	0.022	**P8SCS1204J**

Technical data

Operating voltage	max. 32 V AC/DC
Operating current per contact	max. 4 A
Connection cross section	0.25...0.5 mm² (conductor diameter min 0.1 mm)
Protection	IP65 and IP67 when plugged and screwed down (EN 60529)
Temperature range	-25...+85 °C

Seal kits for P1S cylinders

Complete seal kits consisting of:
Piston seals
Cushioning seals
Piston rod bearing
Piston rod seal
Scraper ring
O-rings

Material specification, see pages 19 and 20.

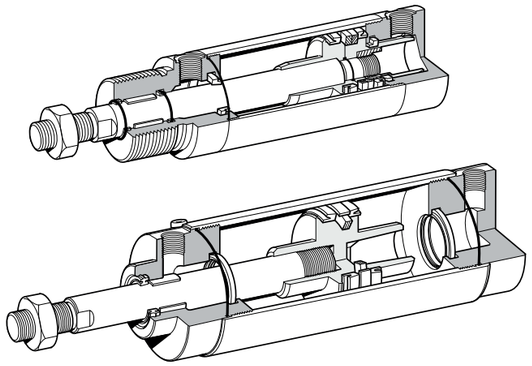

Standard temperature versions

Cylinder designation	Order code
P1S-•032MS	**9121659195**
P1S-•040MS	**9121659196**
P1S-•050MS	**9121659197**
P1S-•063MS	**9121659198**
P1S-•080MS	**9121718905**
P1S-•100MS	**9121718906**
P1S-•125MS	**9121718907**

High temperature versions

Cylinder designation	Order code
P1S-•032MF	**9121720595**
P1S-•040MF	**9121720596**
P1S-•050MF	**9121720597**
P1S-•063MF	**9121720598**
P1S-•080MF	**9121718925**
P1S-•100MF	**9121718926**
P1S-•125MF	**9121718927**

Low temperature versions

Cylinder designation	Order code
P1S-•080ML	**9121718935**
P1S-•100ML	**9121718936**
P1S-•125ML	**9121718937**

Standard temperature with Through rod

Cylinder designation	Order code
P1S-•080FS	**9121718955**
P1S-•100FS	**9121718956**
P1S-•125FS	**9121718957**

Standard temperature with stainless steel scraper ring

Cylinder designation	Order code
P1S-•080MQ	**9121718915**
P1S-•100MQ	**9121718916**
P1S-•125MQ	**9121718917**

Grease

Version	Weight	Order code
Standard and Low temperature	30 g	**9127394541**
High temperature	30 g	**9127394521**

Global experience truly local service

supplying the following industries.....

Aerospace
Agriculture
Automotive
Beveridge
Defence
Engineering (C+M+E)
Food
General Industry
Medical
Pharma

Sales, Service Centre and Trade Counter facility in High Wycombe.

We design, build and supply Electronic, Pneumatic, Hydraulic, Filtration, Controls and Systems.

Wherever.....
Wherever.....
whatever....
whatever....

Parker Zander

Parker domnick hunter

Parker Store
Filtration · Hydraulics · Pneumatics

Parker Balston

Customer Service: 0800 027 8442
Telephone: 01494 530291
International: +44 (0)1494 530291
sales@JJAirSystems.co.uk
www.JJAirSystems.co.uk

J&J Air Systems

Avetta

J&J Air Systems, Sands Industrial Estate, High Wycombe, Bucks HP12 4HJ, United Kingdom.